INSTRUCTION SHEET

FOR0003
3 POINT HITCH CAT. 1 & 2 FOR LOG LOADERS

APPLICATION

The FOR0003 kit is designed to install the BF106, BF126, BF146 and BF166 log loaders.

INSTALLATION

Tractors with Quick Hitch (Figure 1)

1. Insert the two 1 1/8" x 6 1/2" lg pins (item 1) in the upper holes of the 3 pt hitch (item 7) by inserting first a bushing (item 9 not included) between the plates of each lower hitch (item 5) and locking in place with the 7/16" linchpin (item 3).
2. Insert the tractor pin (item 2) in the lower hole of the upper itch (item 8) and lock in place with the linchpin (item 4).
3. Lower the tractor quick hitch (item 6) as close as possible to the ground and backup the tractor until the quick hitch notches are under the 3 pt hitch (item 5) and aligned with the 3 pins (items 1-2).
4. Raise the quick hitch (item 6) slowly until the 3 pt hitch (item 5) is hooked on securely.

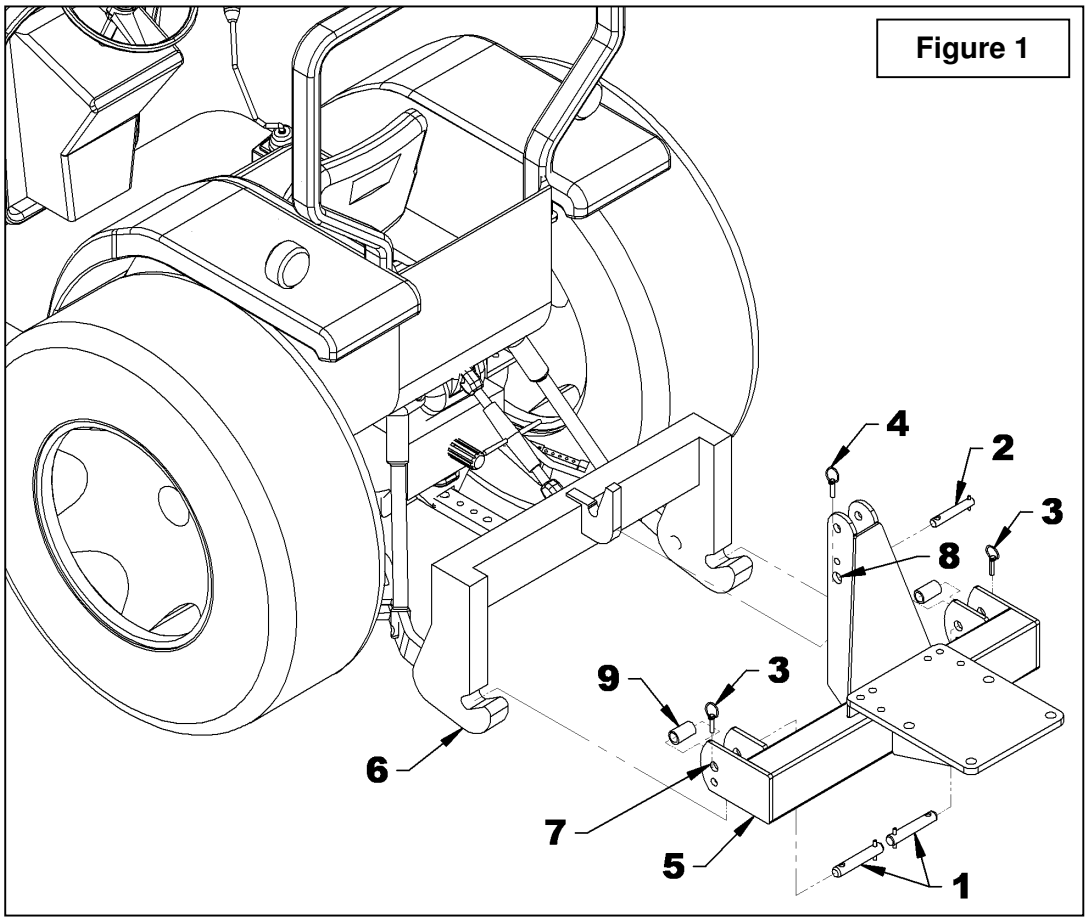

Figure 1

INSTRUCTION SHEET

FOR0003
3 POINT HITCH CAT. 1 & 2 FOR LOG LOADERS

Tractors - Category 1 ***(Figure 2)***

1. Insert the spring pins (item 10) in the 7/8" x 5 5/8" pins (item 1).
2. Lower the tractor quick hitch (item 6) as close as possible to the ground then back up the tractor until the holes of the lower hitches are aligned with the lower holes of the 3 pt hitch (item 8).
3. Insert the two 7/8" x 5 5/8" pins (item 1) in the lower holes of the hitch (item 8) and lock in place with the linchpins (item 3)
4. Align the upper hitch (item 7) with the middle hole of the 3 point hitch (item 9), insert the tractor pin (item 2) and lock in place with the linchpin (item 4).
5. Adjust the loader's 3 point hitch (item 5) with the upper hitch (item 7) and the anti-sway arms (item 6) so the hitch plate (item 5) is perfectly horizontal and to prevent the back and forth motions of the hitch.

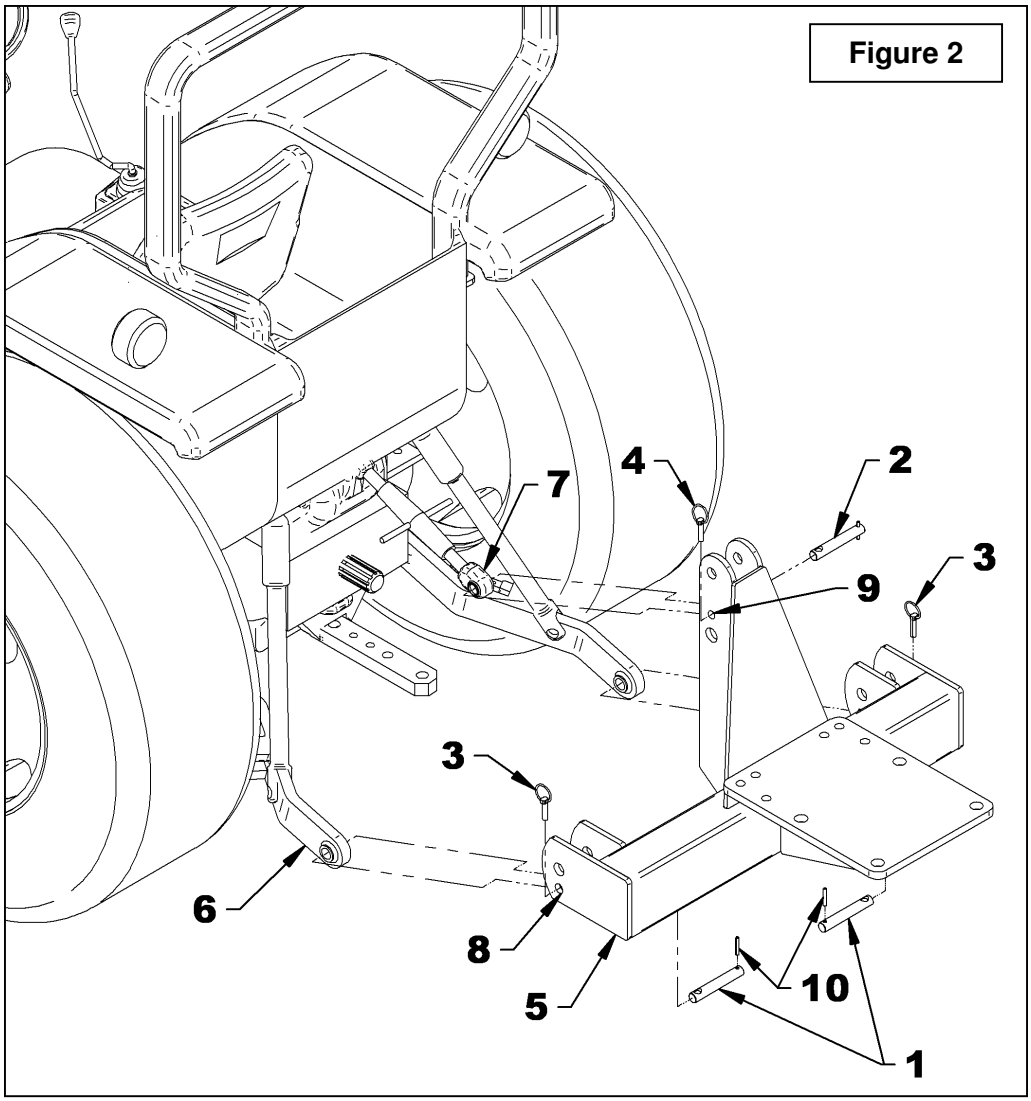

Tractors - Category 2 ***(Figure 3)***

1. Lower the tractor quick hitch (item 6) as close as possible to the ground then back up the tractor until the holes of the lower hitches are aligned with the lower holes of the 3 pt hitch (item 8).
2. Insert the two 1 1/8" x 6 1/2" pins (item 1) in the upper holes of the hitch (item 8) and lock in place with the linchpins (item 3)
3. Align the upper hitch (item 7) with the upper hole of the 3 point hitch (item 9), insert the tractor pin (item 2) and lock in place with the linchpin (item 4).
4. Adjust the loader's 3 point hitch (item 5) with the upper hitch (item 7) and the anti-sway arms (item 6) so the hitch plate (item 5) is perfectly horizontal and to prevent the back and forth motions of the hitch.

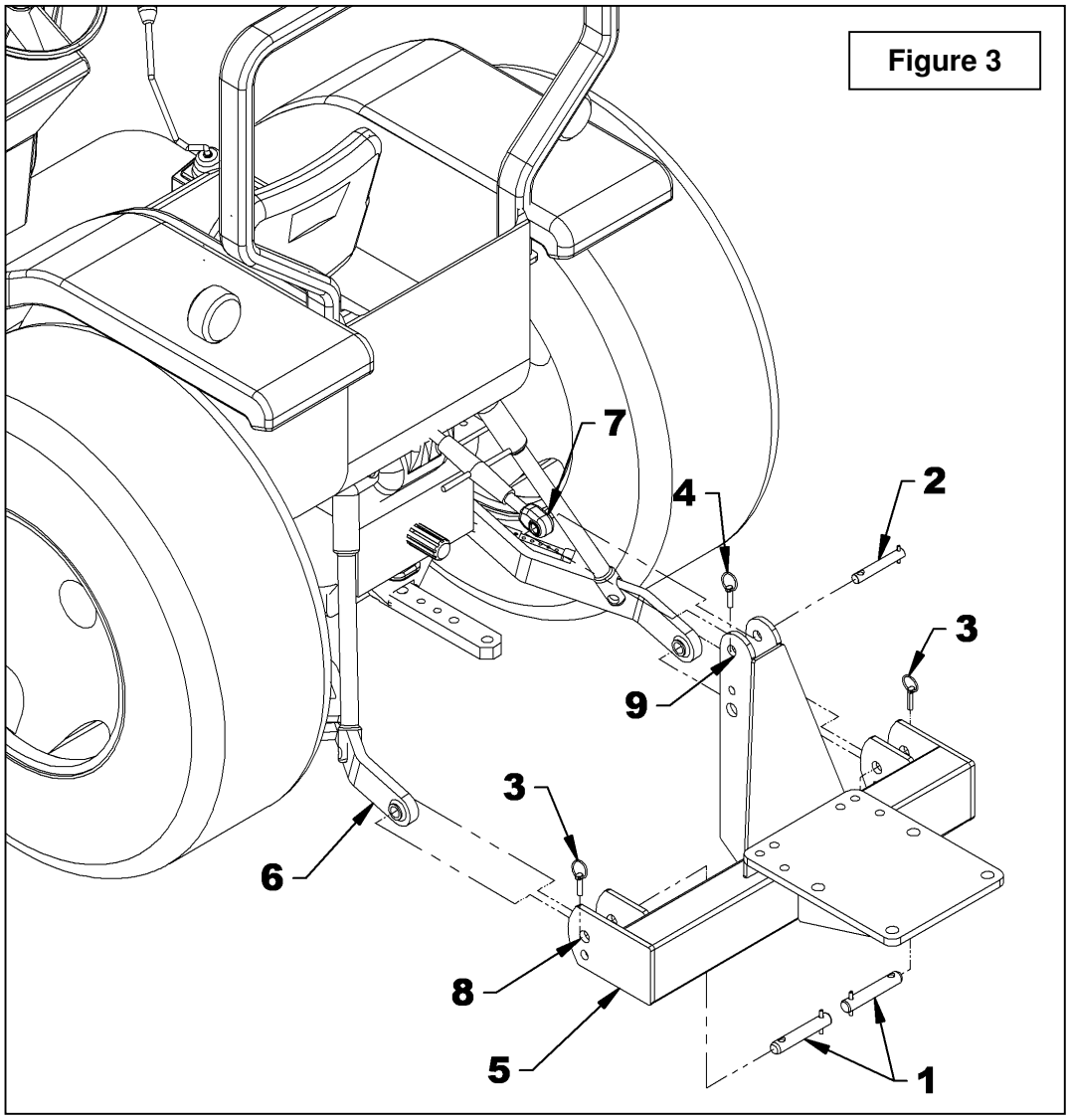

Figure 3

Installation of the Loader on the 3 Point Hitch *(Figures 4-5-6)*

The position of the log loader upon reception does not correspond to the installation position.

1. **Figure 4:** Remove the metal strap (item 2) and lift the loader using the lifting plate (item 1).
2. Connect the loader's hydraulic hoses to the tractor hydraulic ports.
3. **Figure 5:** Attach the stabilizers (item 4) with a lifting belt or a chain (item 2).
4. **Figure 5:** Hook up a chain about 18" long (item 1) to the lifting plate (item 3) and using a hoist chain (item 5), slowly raise the loader by the lifting belt (item 2) and the 18" chain (item 1) and remove the shipping supports (items 6-7) saving the hardware for future use.
5. **Figure 4:** Pivot the loader 180º making sure to turn it in the right direction to prevent the hydraulic hoses from getting tangled up around the mast.

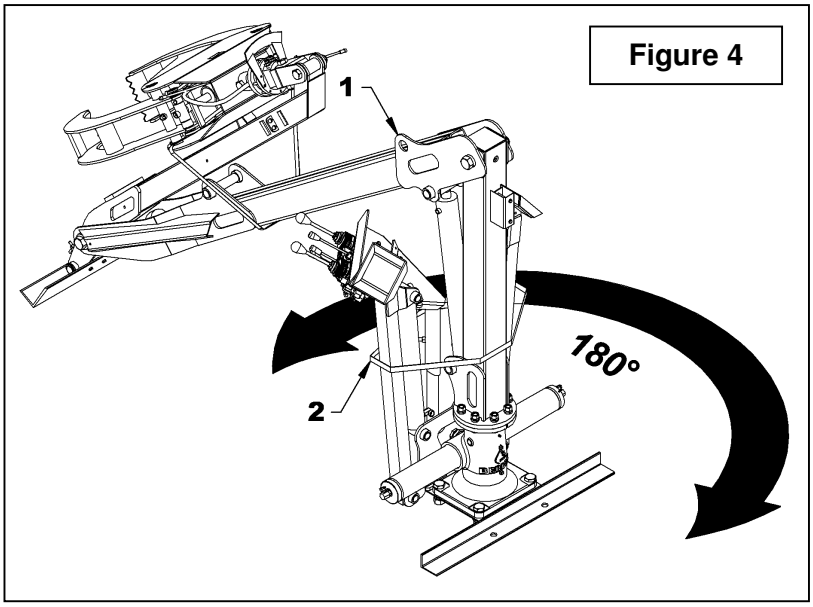

Figure 4

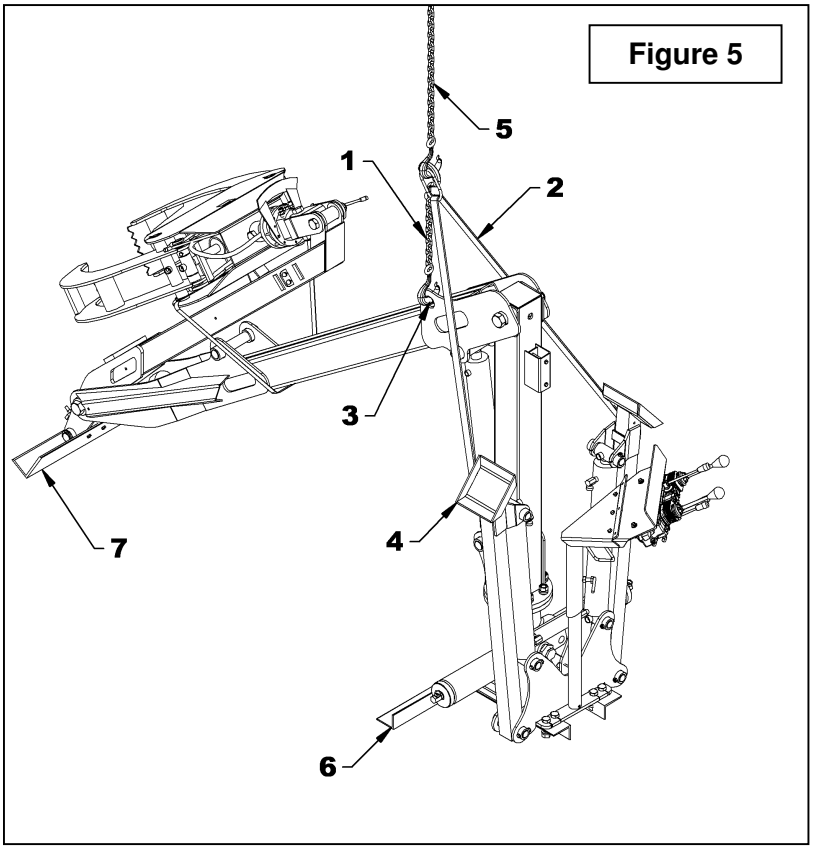

Figure 5

6. **Figure 6:** Position the 3 point hitch (item 1) under the loader (item 2) and, using the hoist chain (item 9), lower the loader slowly on the 3 pt hitch plate (item 1) making sure the valve assembly (item 10) does not come into contact with the tractor.

NOTE: Attach the loader section that rests on the 3 pt hitch first whether it is the stabilizer section or the rack section it doesn't matter.

7. **Figure 6:** Attach the stabilizer section with six 3/4" NC x 2 1/2" hex bolts (item 8), the 3/4" lockwashers (item 4) and the 3/4" hex. nuts (item 3). Tighten at 297 ft-lbs (403 N-M).

NOTE: Four of the items 8, 4 and 3 can be found in the hardware bag and two were removed at step 5.

8. **Figure 6:** Attach the rack section with four 1" NC x 3 1/4" hex bolts (item 7), 1" lockwashers (item 6) and 1" hex. nuts (item 5). Tighten at 638 ft-lbs (865 N-M).

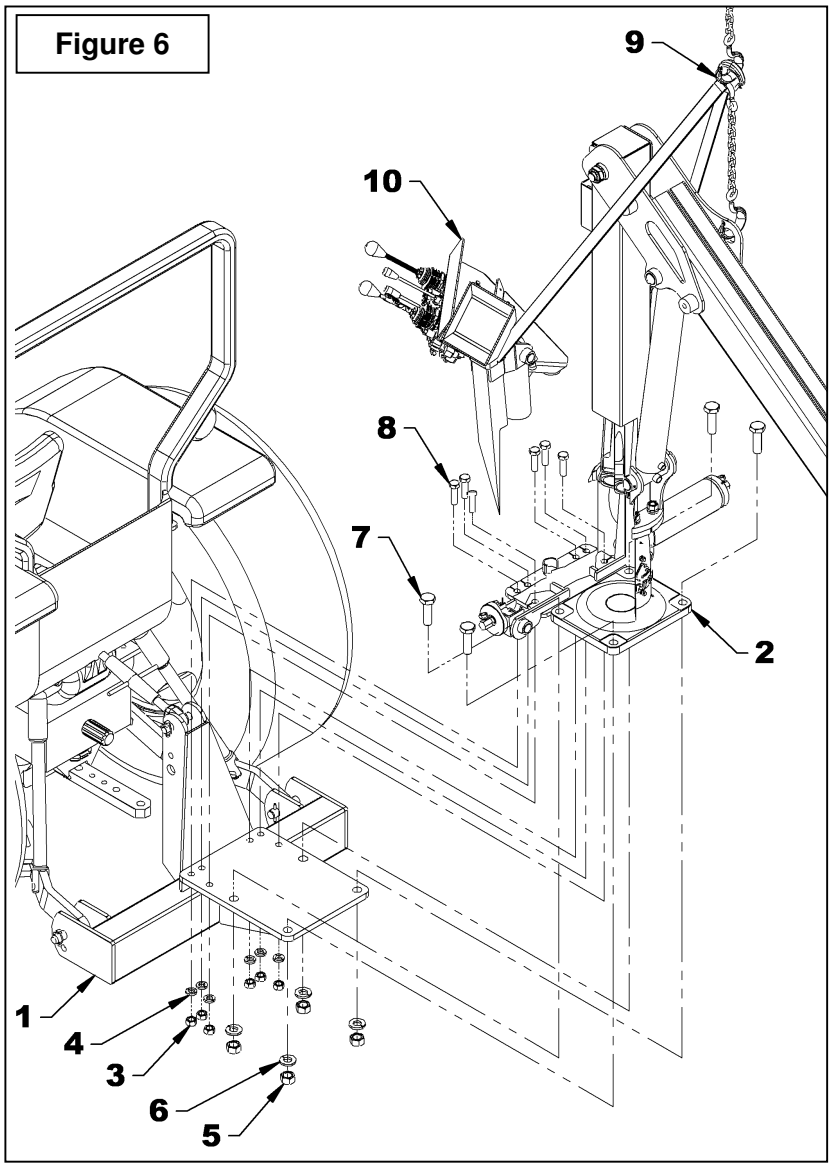

INSTRUCTION SHEET

FOR0003
3 POINT HITCH CAT. 1 & 2 FOR LOG LOADERS

PARTS
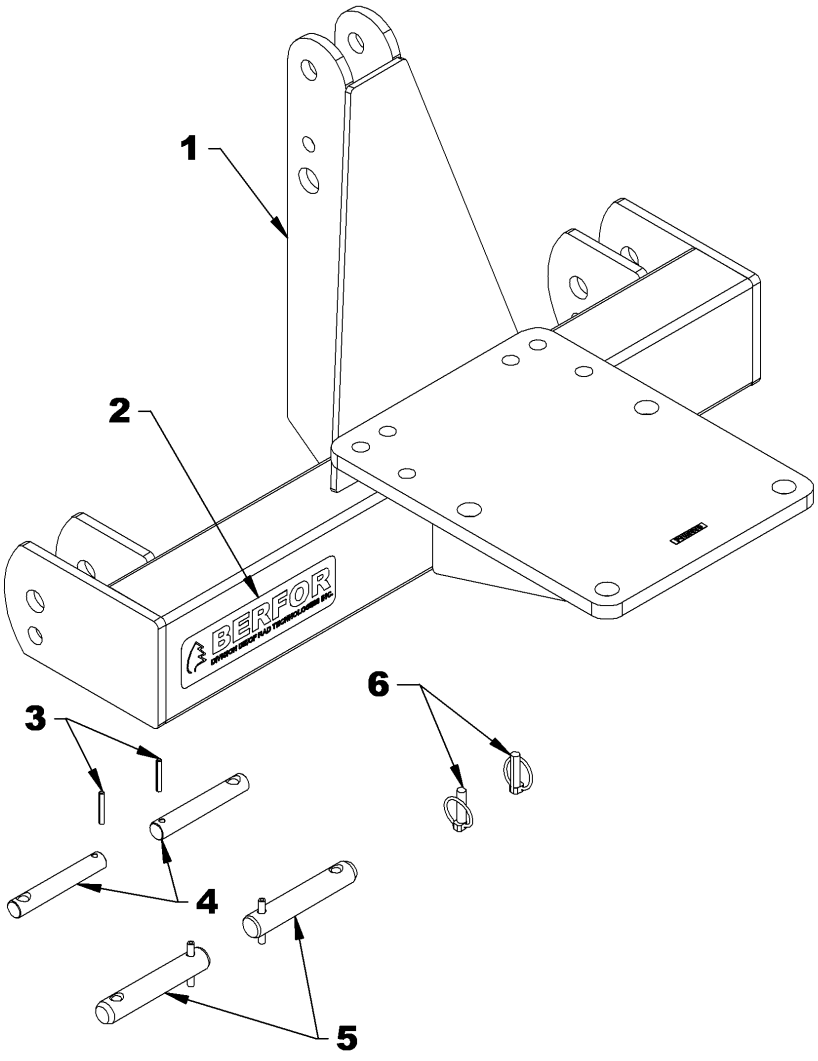
REF.	DESCRIPTION	QTY	PART #
1	3 point hitch	1	130079
2	Decal " RADTECH Innovation "	1	2500762
3	Spring pin Ø1/4" x 1 3/4" lg black	2	O/L
4	Pin Cat. 1 - Ø7/8" x 6 1/4" lg PTD	2	4600043
5	Pin Cat. 2 - Ø1 1/8" x 6 1/4" lg PTD	2	4600042
6	Linchpin 7/16" PTD	2	1900003